# CAT5 Balun CAT5 Distribution Component HD Video



## KEY FEATURES

UTP Balun Transformer

*Distribute a high definition component video/digital audio source to a remote location over extended distances using economical CAT5 cable.*

- Uses standard CAT5 or CAT6 cable
- Can be used with four composite video
- Four RCA connectors for component video and SPDIF
- Heavy gauge steel, powder-coated chassis, corrosion and scratch resistant

## SPECIFICATIONS

### Video:

| | |
|---|---|
| Nominal input level: | 1 Volt peak to peak |
| Gain: | N/A (passive unit) |
| Input Impedance: | 75 ohms, unbalanced |
| Output Impedance: | 100 ohms, balanced |
| Isolation port to port: | 60 dB |
| Isolation output to input: | bidirectional |
| Return loss: | >15 dB |
| Video bandwidth: | >35 MHz |

### Audio:

1 Audio Channel Available: may be used to transport a SPDIF digital audio signal or a mono audio signal (mono analog signal wil be attenuated slightly due to lower impedance of the digital audio channel)

### Distance:

The adapter provides a minimum signal loss and may be used for high definition distribution with cable lengths up to 200 feet with no monitor adjustment

### Power:

Requirement: No power required

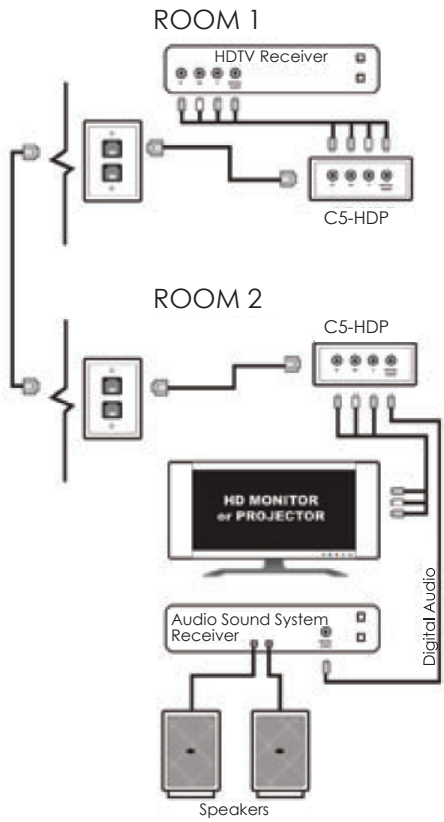

C5RM optional rack mount available

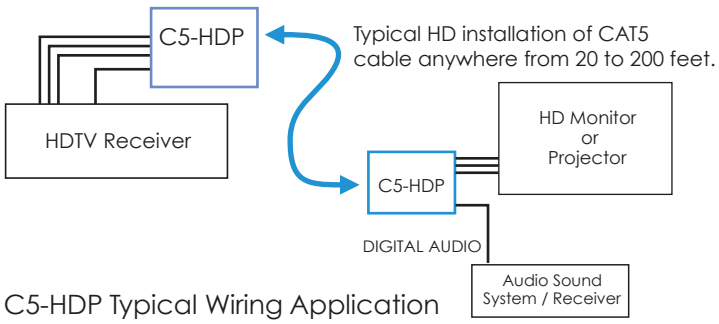


C5-HDP Typical Wiring Application

AUTHORIZED RESELLER:

CONTACT: